Technische Daten/ Technical Data

KLUDI DECUS
single lever bidet mixer
DN 15

Ref.: 54217N075

Finishes:
N0 Brushed Gold (18) PVD

Product description
Manufacturer KLUDI GmbH & Co. KG
Typ: KLUDI DECUS
single lever bidet mixer
Ref.: 54217N075

bidet mixer
single lever mixer
1-hole mounted
solid lever, metal
aerator M16 PCA
ball joint with aerator
ceramic cartridge with hot water safety device
flow rate at 3 bar 4,5 l/min.
flexible hoses G 3/8 DVGW approved
rapid installation set
pop up waste set G1 1/4 metal
EU taxonomy: max. 6 l/min. -
Substantial Contribution (SC) possible

Produktabbildung/ Product picture

Maßzeichnung/ Dimensional drawing

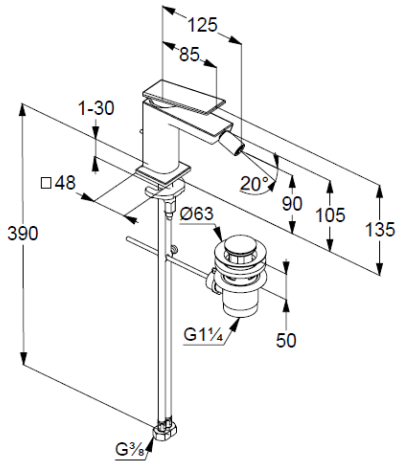
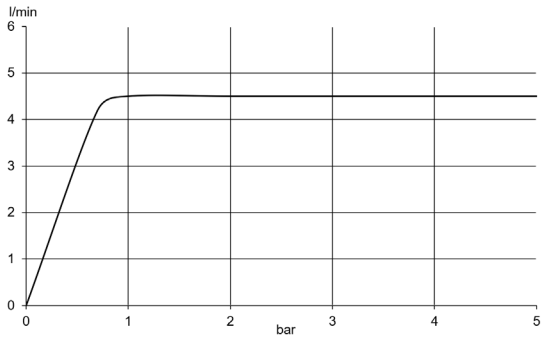
Durchfluss/ Flow rate