Technische Daten/ Technical Data

DIANA K500
Kitchen faucet
DN 15

Ref.:
438090572

Finishes:
05 chrome

Product description
Manufacturer DIANA
Typ: DIANA K500
Kitchen faucet
Ref.: 438090572

Kitchen faucet
for open hot water heaters
single lever mixer
single hole mounted
solid lever, metal
lateral actuation
Aerator M16,5 laminar
ceramic cartridge with hotwater safety device
flow rate at 3 bar= 5 l/ min.
swivel spout (360°)
flexible hoses G 3/8 DVGW approved
rapid installation set

Produktabbildung/ Product picture

Maßzeichnung/ Dimensional drawing

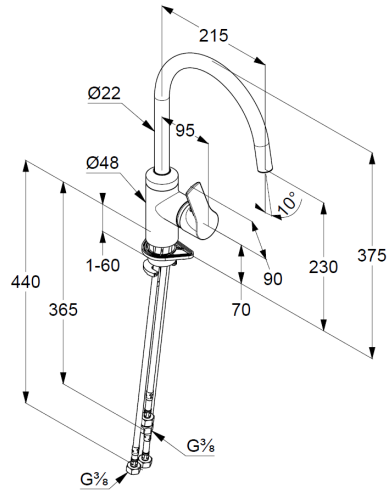

Durchfluss/ Flow rate

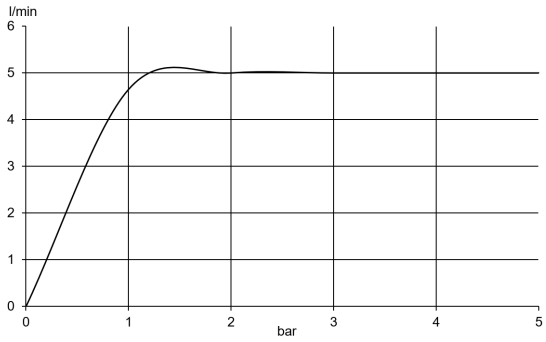

DIANA