Technische Daten/ Technical Data

DIANA M100
single lever bidet mixer
DN 15

Ref.: 485300572

Finishes:
05 chrome

Product description
Manufacturer DIANA
Typ: DIANA M100
single lever bidet mixer
Ref.: 485300572

bidet mixer
single lever mixer
1-hole mounted
solid handle, metal
S- Pointer M24
ceramic cartridge with hot water safety device
flow rate at 3 bar 6 l/min.
flexible hoses G3/8 DVGW approved
rapid installation set
pop up waste G1 1/4 metal

Produktabbildung/ Product picture

Maßzeichnung/ Dimensional drawing

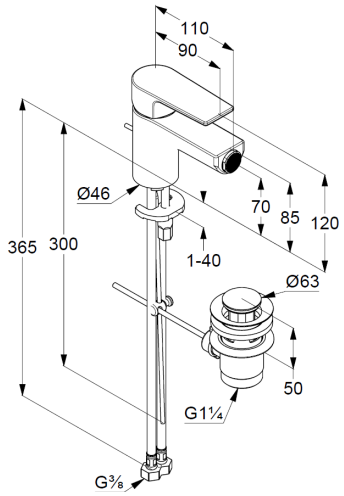

Durchfluss/ Flow rate

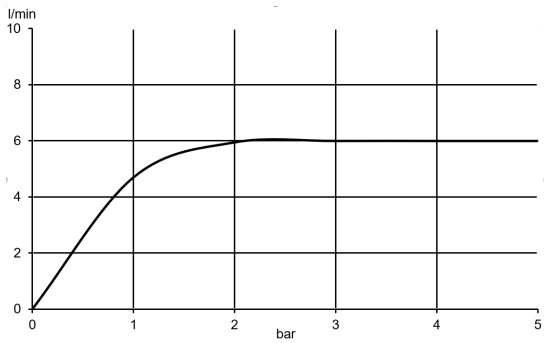

DIANA