Technische Daten/ Technical Data

KLUDI 1926
bath and shower mixer
DN 15

Ref.: 514414520

Finishes:
45 gold plated 23 carat

Product description
Manufacturer KLUDI GmbH & Co. KG
Typ: KLUDI 1926
bath and shower mixer
Ref.: 514414520

bath and shower mixer
2-handle mixer
wall mounted
manual diverter: shower/bath
cross handle, metal
aerator M28
protected against back flow
shower outlet G1/2
ceramic headparts 180°
flow rate bath at 3 bar 23 l/min.
flow rate shower at 3 bar 17 l/min.
S-unions G1/2 x G3/4

hand shower 1 S
1 spray pattern
connection G1/2
sieve seal

shower hose
plastic coated
with metal-effect
G1/2 x G1/2 x 1250mm

Produktabbildung/ Product picture

Maßzeichnung/ Dimensional drawing

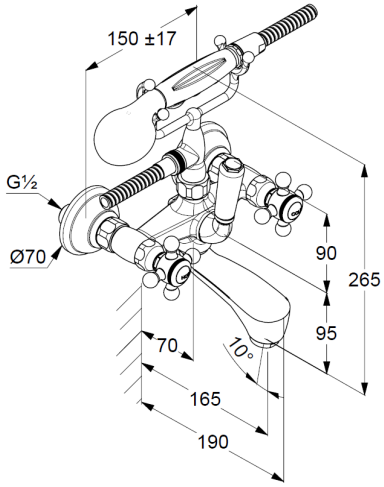
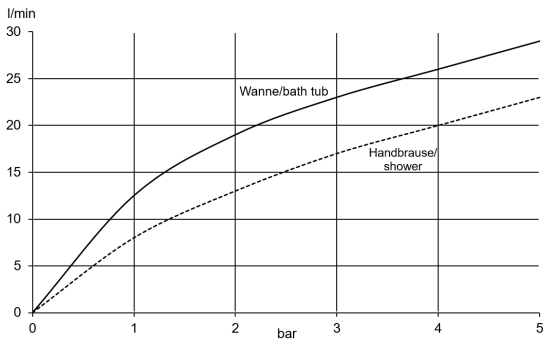
Durchfluss/ Flow rate