Technische Daten/ Technical Data

KLUDI DECUS
washbowl mixer
DN 15

Ref.: 542980575

Finishes:
05 chrome

Product description
Manufacturer KLUDI GmbH & Co. KG
Typ: KLUDI DECUS
washbowl mixer
Ref.: 542980575

washbowl mixer
single lever mixer
1-hole mounted
solid lever, metal
aerator M18,5 PCA
ceramic cartridge with hot water safety device
flow rate at 3 bar 4,5 l/ min.
fixed spout
flexible hoses G3/8 DVGW approved
shank-fixing
without pop up waste
EU taxonomy: max. 6 l/min. -
Substantial Contribution (SC) possible

Produktabbildung/ Product picture

Maßzeichnung/ Dimensional drawing

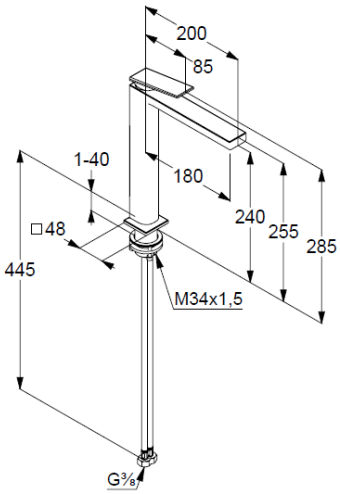
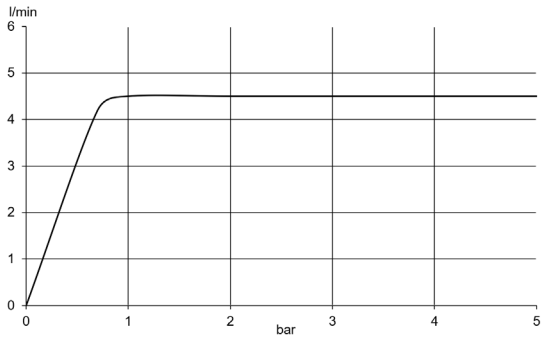
Durchfluss/ Flow rate