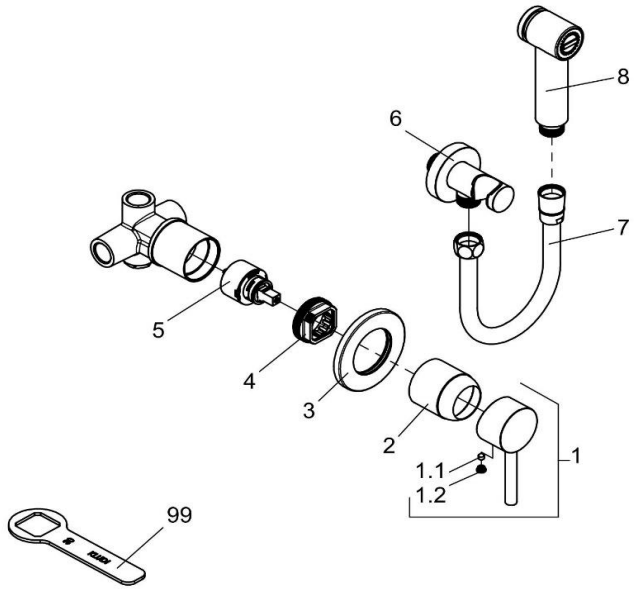

38998N076		Hygiene- Set	hyienic- set
1	74613N0-00	HEBEL BOZZ	LEVER BOZZ
1.1	92204601-00	GEWINDESTIFT	GRUB SCREW
1.2	930897N0-00	STOPFEN	PLUG
2	922154N0-00	ABDECKKAPPE	COVER CAP
3	74488N0-00	UP - ROSETTE	ESCUTCHEON, CONCEALED
4	93033300-00	SPANNSCHRAUBE	FASTENING SCREW
5	7560700-00	STEUEREINHEIT	CERAMIC CARTRIDGE
6	60547N0-00	SCHLAUCH - ANSCHLUSSBOGEN	HOSE CONNECTING BEND
7	61071N0-00	BRAUSESCHLAUCH	SHOWER HOSE
8	73434N0-00	HYGIENE SIDE SPRAY	HYGIENIC SIDE SPRAY
99	92914900-00	SPANNSCHRAUBENSCHLÜSSEL	WRENCH FOR FASTENING SCREW

KLUDI