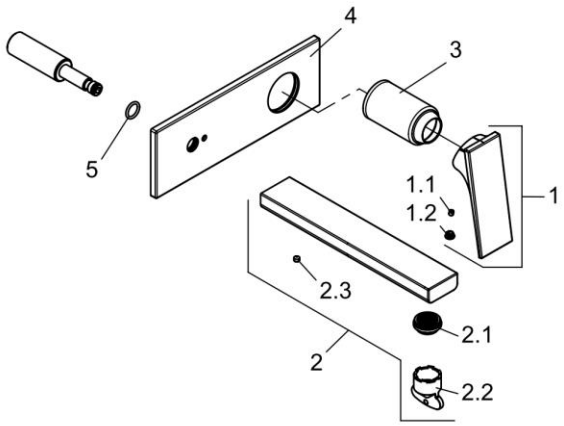

54244N275		Zwei-Wege-Umstellung	two-way diverter
1	78947N2-00	HEBEL DECUS	LEVER DECUS
1.1	92204601-00	GEWINDESTIFT	GRUB SCREW
1.2	930197N2-00	STOPFEN	PLUG
2	79012N2-00	AUSLAUF	SPOUT
2.1	7309800-00	STRAHLREGLER	AERATOR
2.2	93087600-00	STRAHLREGLERSCHLÜSSEL	WRENCH FOR AERATOR
2.3	92124635-00	GEWINDESTIFT	GRUB SCREW
3	920719N2-00	ABDECKHÜLSE	COVER SLEEVE
4	79015N2-00	UP - ROSETTE	ESCUTCHEON, CONCEALED
5	92528311-00	O - RING	O - RING

KLUDI