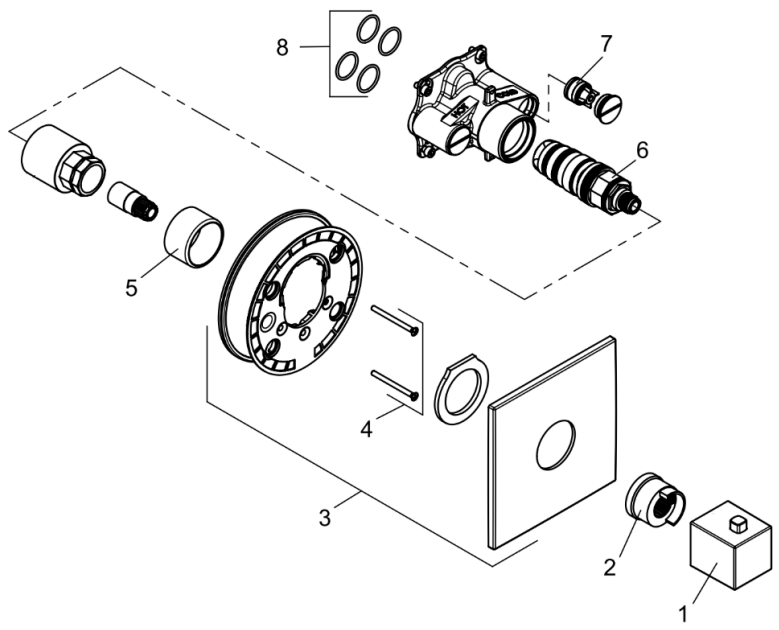

54739N275		Unterputz-Thermostatarmatur	concealed thermostatic mixer
1	78932N2-00	THERMOSTATGRIFF	HANDLE FOR THERMOSTAT
2	930301N2-00	JUSTIERBUCHSE	SLEEVE FOR ADJUSTMENT
3	78895N2-00	UP - ROSETTE	ESCUTCHEON, CONCEALED
4	7446335-00	SCHRAUBEN SET	SCREW SET
5	920122N2-00	HÜLSE	SLEEVE
6	7310800-00	THERMOSTAT	TEMPERATURE CONTROL UNIT
7	7479700-00	RÜCKFLUSSVERHINDERER	BACK FLOW PREVENTER
8	7301100-00	DICHTUNGSSATZ	SEALING SET

KLUDI