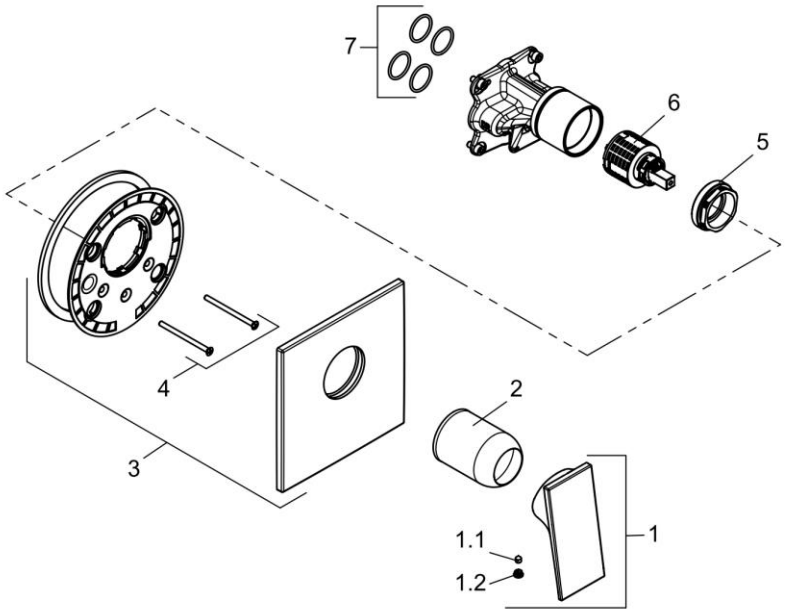

54755N275		Unterputz-Brause-Einhandmischer	concealed single lever shower mixer
1	78918N2-00	HEBEL DECUS	LEVER DECUS
1.1	92204601-00	GEWINDESTIFT	GRUB SCREW
1.2	930197N2-00	STOPFEN	PLUG
2	920591N2-00	ABDECKHÜLSE	COVER SLEEVE
3	70007N2-00	UP - ROSETTE	ESCUTCHEON, CONCEALED
4	7204035-00	SCHRAUBEN SET	SCREW SET
5	92266837-00	SPANNSCHRAUBE	FASTENING SCREW
6	7685600-00	STEUEREINHEIT	CERAMIC CARTRIDGE
7	7301100-00	DICHTUNGSSATZ	SEALING SET

KLUDI