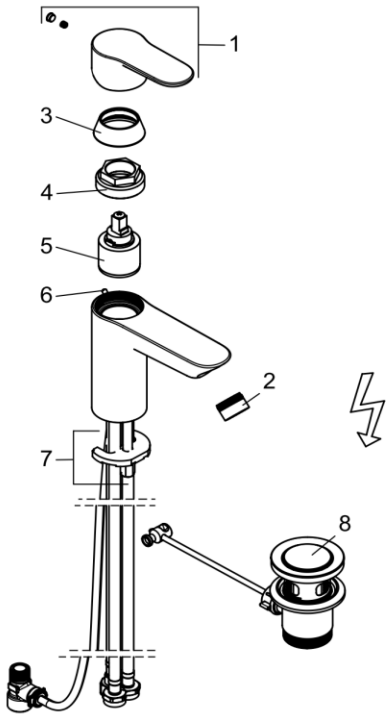


382760549

| | | | |
|---|---|---|---|
| 79 02 951 | | sanibel 1001-Waschtischarmatur M | sanibel bath mixer M |
| | | Niederdruck für offene Heißwasserbereiter | ND with hot water heater |
| 1 | 7207205-49 | HEBEL SANIBEL | LEVER SANIBEL |
| 2 | 7208805-00 | STRAHLREGLER | AERATOR |
| 3 | 7208205-00 | ABDECKKAPPE | COVER CAP |
| 4 | 7208400-00 | SPANNSCHRAUBE | FASTENING SCREW |
| 5 | 7208100-00 | STEUEREINHEIT | CERAMIC CARTRIDGE |
| 6 | 7208605-00 | ZUGSTANGE | LIFT ROD |
| 7 | 7208500-00 | BEFESTIGUNGSSATZ | MOUNTING KIT |
| 8 | 7654505-00 | ABLAUFGARNITUR | POP UP WASTE |
| | | | |
| | | | |
| | | | |
| | | | |
| | | | |
| | | | |
| | | | |
| | | | |
| | | | |
| | | | |
| | | | |

| | | | |
|---|---|---|---|
| | | | |