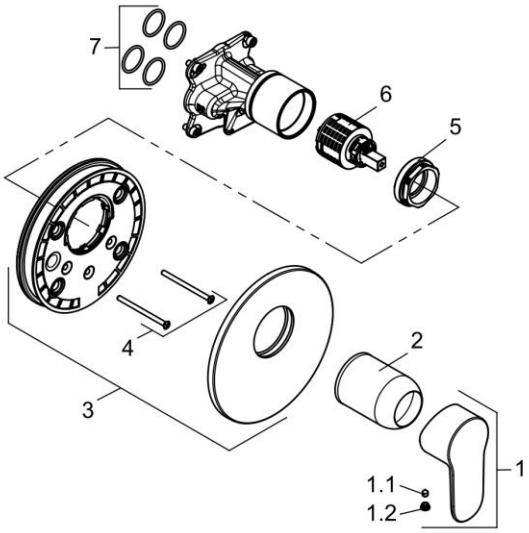

387550549

79 02 958		sanibel 1001-Brausearmatur A25 Unterputz	Sanibel 1001 shower mixer A25 concealed
		Fertigmontageset Rosette rund verchromt	ready assembly set escutcheon concealed chromed
1	7207405-49	HEBEL SANIBEL	LEVER SANIBEL
1.1	92204601-00	GEWINDESTIFT	GRUB SCREW
1.2	93019705-00	STOPFEN	PLUG
2	92059105-00	ABDECKHÜLSE	COVER SLEEVE
3	7000305-00	UP - ROSETTE	ESCUTCHEON, CONCEALED
4	7204035-00	SCHRAUBEN SET	SCREW SET
5	92266837-00	SPANNSCHRAUBE	FASTENING SCREW
6	7685600-00	STEUEREINHEIT	CERAMIC CARTRIDGE
7	7301100-00	DICHTUNGSSATZ	SEALING SET