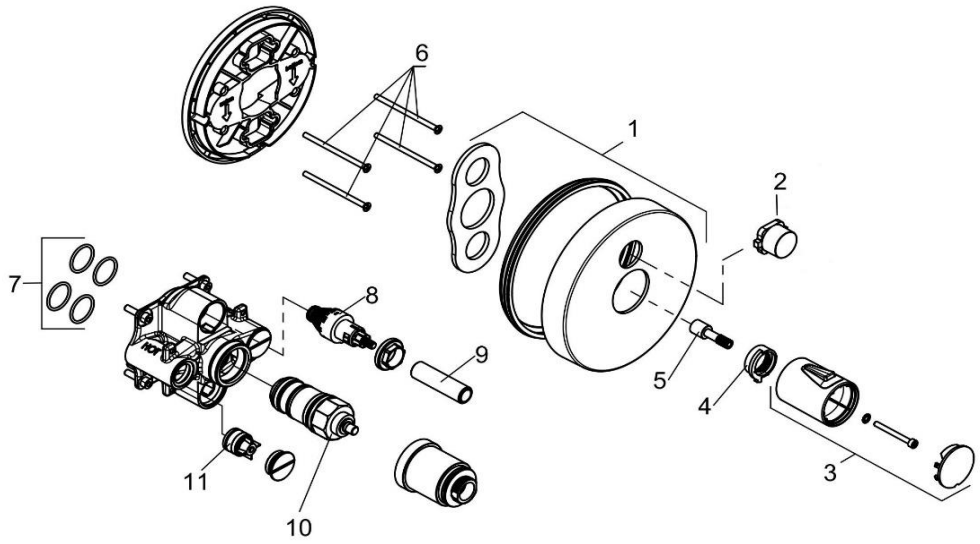

389020538		Unterputz-Brause-Thermostatarmatur	concealed thermostatic shower mixer
1	7328705-00	UP - ROSETTE	ESCUTCHEON, CONCEALED
2	7861805-00	DRUCKTASTE RUND POWER	PRESS BUTTON ROUND POWER
3	7328505-00	THERMOSTATGRIFF	HANDLE FOR THERMOSTAT
4	93012759-00	JUSTIERBUCHSE	SLEEVE FOR ADJUSTMENT
5	91726737-00	SPINDELVERLÄNGERUNG	SPINDEL SCREW EXTENSION
6	7329235-00	SCHRAUBEN SET	SCREW SET
7	7301100-00	DICHTUNGSSATZ	SEALING SET
8	7691900-00	MAGNETVENTIL	MAGNETIC VALVE
9	93088800-00	HÜLSE	SLEEVE
10	7436500-00	THERMOSTAT	TEMPERATURE CONTROL UNIT
11	7479700-00	RÜCKFLUSSVERHINDERER	BACK FLOW PREVENTER