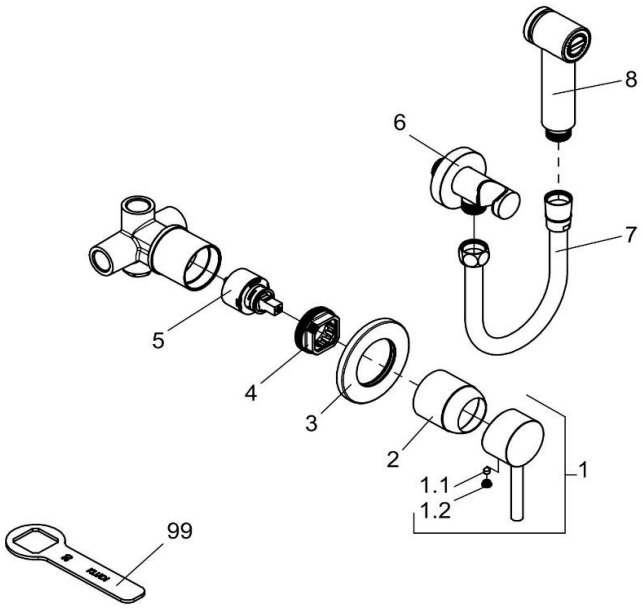


05/22 ->

| 389980576 | | Hygiene- Set | hyienic- set |
|---|---|---|---|
| 1 | 7373105-00 | HEBEL BOZZ | LEVER BOZZ |
| 1.1 | 92204601-00 | GEWINDESTIFT | GRUB SCREW |
| 1.2 | 93019705-00 | STOPFEN | PLUG |
| 2 | 92215405-00 | ABDECKKAPPE | COVER CAP |
| 3 | 7448805-00 | ROSETTE | ESCUTCHEON |
| 4 | 93033300-00 | SPANNSCHRAUBE | FASTENING SCREW |
| 5 | 7560700-00 | STEUEREINHEIT | CERAMIC CARTRIDGE |
| 6 | 6054705-00 | SCHLAUCH - ANSCHLUSSBOGEN | HOSE CONNECTING BEND |
| 7 | 72149F8-00 | BRAUSESCHLAUCH | SHOWER HOSE |
| 8 | 7343405-00 | HYGIENE SIDE SPRAY | HYGIENIC SIDE SPRAY |
| 99 | 92914900-00 | SPANNSCHRAUBENSCHLÜSSEL | WRENCH FOR FASTENING SCREW |
| | | | |
| | | | |
| | | | |
| | | | |
| | | | |
| | | | |
| | | | |
| | | | |
| | | | |
| | | | |
| | | | |

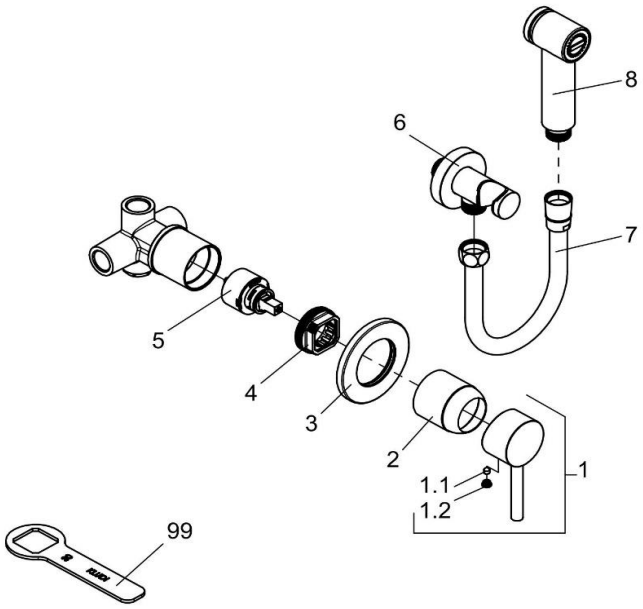


-> 04/22

| 389980576 | | Hygiene- Set | hyienic- set |
|---|---|---|---|
| 1 | 7373105-00 | HEBEL BOZZ | LEVER BOZZ |
| 1.1 | 92204601-00 | GEWINDESTIFT | GRUB SCREW |
| 1.2 | 93019705-00 | STOPFEN | PLUG |
| 2 | 92215405-00 | ABDECKKAPPE | COVER CAP |
| 3 | 7448805-00 | ROSETTE | ESCUTCHEON |
| 4 | 93033300-00 | SPANNSCHRAUBE | FASTENING SCREW |
| 5 | 7560500-00 | STEUEREINHEIT | CERAMIC CARTRIDGE |
| 6 | 6054705-00 | SCHLAUCH - ANSCHLUSSBOGEN | HOSE CONNECTING BEND |
| 7 | 72149F8-00 | BRAUSESCHLAUCH | SHOWER HOSE |
| 8 | 7343405-00 | HYGIENE SIDE SPRAY | HYGIENIC SIDE SPRAY |
| 99 | 92914900-00 | SPANNSCHRAUBENSCHLÜSSEL | WRENCH FOR FASTENING SCREW |
| | | | |
| | | | |
| | | | |
| | | | |
| | | | |
| | | | |
| | | | |
| | | | |
| | | | |
| | | | |
| | | | |