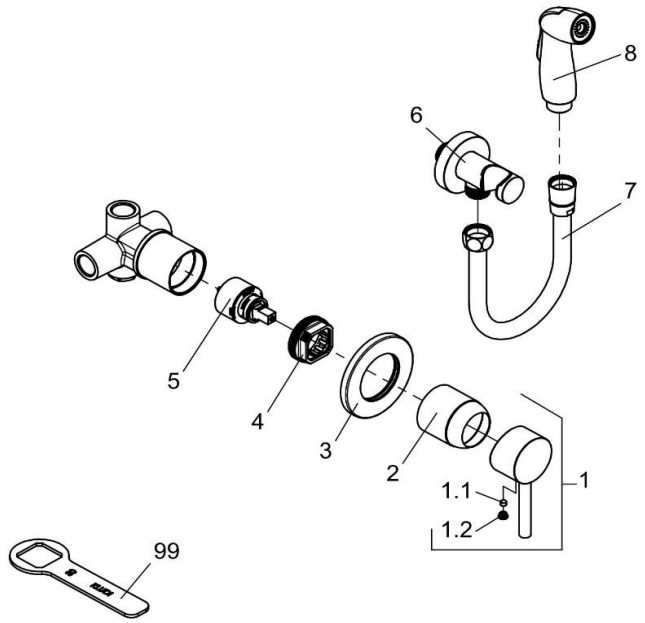

05/2022 ->

389990576		Hygiene- Set	hyienic- set
1	7373105-00	HEBEL BOZZ	LEVER BOZZ
1.1	92204601-00	GEWINDESTIFT	GRUB SCREW
1.2	93019705-00	STOPFEN	PLUG
2	92215405-00	ABDECKKAPPE	COVER CAP
3	7448805-00	ROSETTE	ESCUTCHEON
4	93033300-00	SPANNSCHRAUBE	FASTENING SCREW
5	7560700-00	STEUEREINHEIT	CERAMIC CARTRIDGE
6	6054705-00	SCHLAUCH - ANSCHLUSSBOGEN	HOSE CONNECTING BEND
7	72149F8-00	BRAUSESCHLAUCH	SHOWER HOSE
8	7375105-00	HYGIENE SIDE SPRAY	HYGIENIC SIDE SPRAY
99	92914900-00	SPANNSCHRAUBENSCHLÜSSEL	WRENCH FOR FASTENING SCREW

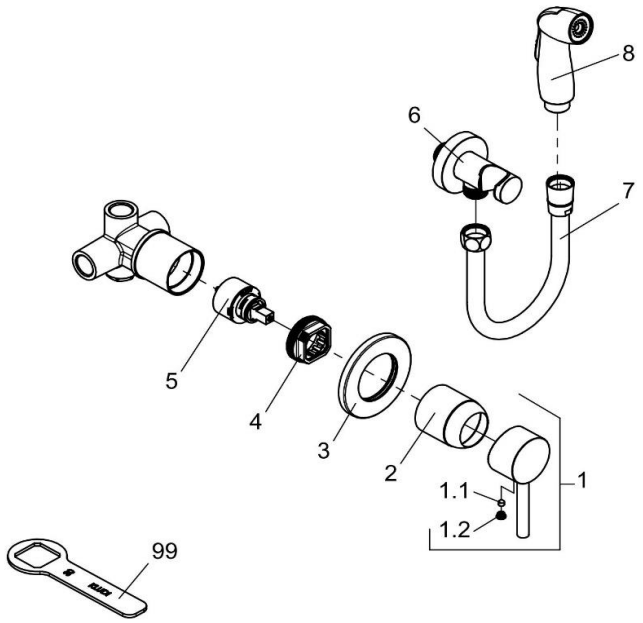

-> 04/2022

389990576		Hygiene- Set	hyienic- set
1	7373105-00	HEBEL BOZZ	LEVER BOZZ
1.1	92204601-00	GEWINDESTIFT	GRUB SCREW
1.2	93019705-00	STOPFEN	PLUG
2	92215405-00	ABDECKKAPPE	COVER CAP
3	7448805-00	ROSETTE	ESCUTCHEON
4	93033300-00	SPANNSCHRAUBE	FASTENING SCREW
5	7560500-00	STEUEREINHEIT	CERAMIC CARTRIDGE
6	6054705-00	SCHLAUCH - ANSCHLUSSBOGEN	HOSE CONNECTING BEND
7	72149F8-00	BRAUSESCHLAUCH	SHOWER HOSE
8	7375105-00	HYGIENE SIDE SPRAY	HYGIENIC SIDE SPRAY
99	92914900-00	SPANNSCHRAUBENSCHLÜSSEL	WRENCH FOR FASTENING SCREW