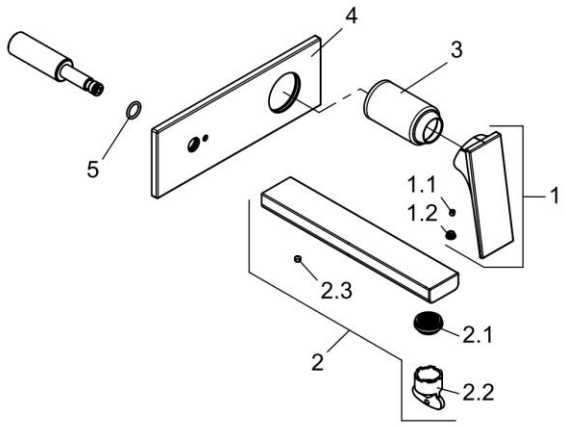

542440575		2-Loch-Wand-EHM	2 hole hole wall basin mixer
1	7894705-00	HEBEL DECUS	LEVER DECUS
1.1	92204601-00	GEWINDESTIFT	GRUB SCREW
1.2	93019705-00	STOPFEN	PLUG
2	7901205-00	AUSLAUF	SPOUT
2.1	7309800-00	STRAHLREGLER	AERATOR
2.2	93007800-00	STRAHLREGLERSCHLÜSSEL	WRENCH FOR AERATOR
2.3	92124635-00	GEWINDESTIFT	GRUB SCREW
3	92071905-00	ABDECKHÜLSE	COVER SLEEVE
4	7901505-00	UP - ROSETTE	ESCUTCHEON, CONCEALED
5	92528311-00	O - RING	O - RING

KLUDI